Connector

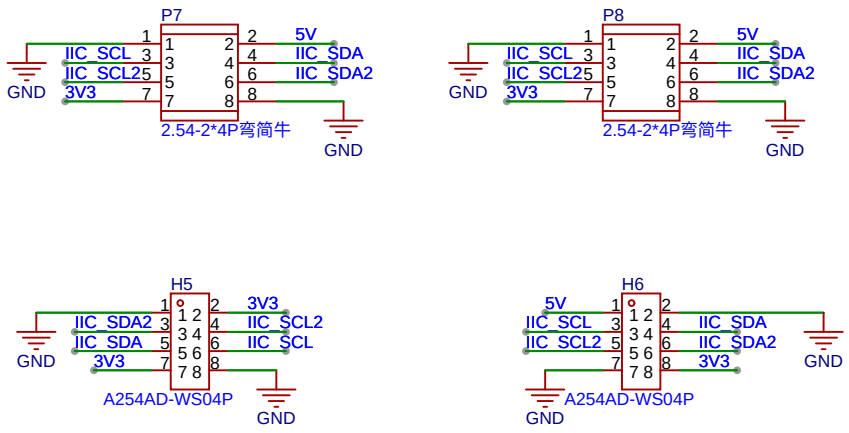

carletz	DOMIX - Domotic module for smart home & co		Create at	2026-01-29	Drawn	carletz
			Update at	2026-02-03	Reviewed	carletz
	Version	Size	Page 1 Total 1	Schematic	M3-4-5-6 - Vertical Module		
	1	A4	EasyEDA	Board	V3-4-5-6 - MULTI - VERTICAL	Page	Connector